# CLOSED-END COMPACTION SOLUTION FOR MORE PROFITABLE WASTE HANDLING

**ORWAK**
**SEMI-AUTO HORIZONTAL BALERS**

## SEMI-AUTOMATIC HORIZONTAL BALERS 1540-1550-1560

Compact design, yet high-density bales! The Orwak closed-end horizontal balers are compact size and come with manual bale tying. They are ideal for businesses with big volumes of recyclable material when vertical balers are too labor intensive or where bulk loading is required.

ORWAK®
PART OF Sulo GROUP

# SEMI-AUTOMATICS; PERFECT FOR YOUR BUSINESS

This range of semi-automatic balers is ideal when you are looking for a compact size indoor waste compaction solution and the volumes surpass what is effective to handle with vertical balers.

## WHAT IS A SEMI-AUTO BALER?

The semi-automatics are small horizontal balers. The compaction cycles are automatic, while the bale tying is manual. The material is compacted against the closed-end of the press channel ensuring high-density bales.

## MANUAL BALE TYING

When the press chamber is full, the operator ties the bale manually. A four-fold strapping or wire binding provides a firm grip o fthe bale.

## SEMI-AUTO BALE EJECTION

When a bale is ready, the operator simply pushes two buttons to eject it on a pallet for easy removal by forklift.

## PLENTY OF FEED OPTIONS

The semi-automatics can be fed manually from the ground or a dock, by bin lifter, chute, conveyor or forklift.

## WHY SEMI-AUTOMATIC BALERS?

- High-capacity compaction of large waste volumes into dense bales
- Require little space and can be placed indoors
- Generous infeed and automated compaction means convenient waste disposal for the staff
- Generate mill-size bales for delivery to the recycling industry
- Cost effective waste solution

## BROAD APPLICATION AREAS

**Optimized for different types of paper, cardboard, plastic film, PP Big Bags and (pierced) PET bottles.**

Our semi-automatic horizontal balers are perfect in any environment where big volumes of recyclables need to be taken care of and the volume exceeds what is productive to handle in a vertical baler:

**Retailers**

**Manufacturing industries**

**Recyclers**

**Warehouses**

**Distribution centers**

# ORWAK SEMI-AUTOMATIC HORIZONTAL BALER
# 1540-1550-1560

## MACHINE DIMENSIONS

| | LENGTH (L) | WIDTH (W) | HEIGHT (H) | INFEED OPENING | CHANNEL SECTION |
|---|---|---|---|---|---|
| **SEMI-AUTO 1540-1550-1560** | 7460 mm | 2160 mm | 2550 mm | 1500x1100 mm | 1100 x 750 mm |

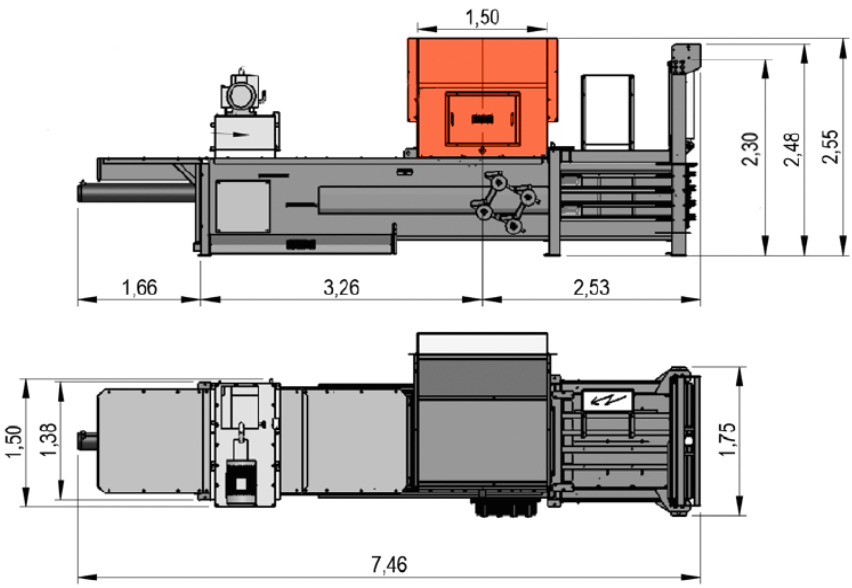


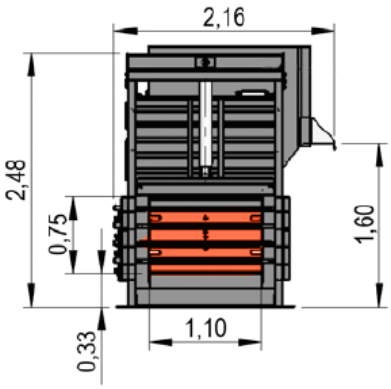


## TECHNICAL DATA

| MODEL | LOADING VOLUME | CYCLE TIME | MOTOR | PRESS FORCE | SURFACE PRESSURE | BALE SIZE HxDxL (IN THE CHAMBER) | BALE BINDING | BALE WEIGHT | MACHINE WEIGHT | OIL TANK |
|---|---|---|---|---|---|---|---|---|---|---|
| **1540** | 1.25 $m^3$ | 58 s | 7.5 kW | 40 ton, 400 kN | 4.8 kg/$cm^2$ | 1100x750x900-1300 mm* | 4-fold | up to 500 kg** | **4950 kg** | **170 L** |
| **1550** | 1.25 $m^3$ | 39 s | 15 kW | 50 ton, 500 kN | 6.1 kg/$cm^2$ | 1100x750x900-1300 mm* | 4-fold | up to 500 kg** | **5100 kg** | **300 L** |
| **1560** | 1.25 $m^3$ | 52 s | 15 kW | 60 ton, 600 kN | 7.3 kg/$cm^2$ | 1100x750x900-1300 mm* | 4-fold | up to 500 kg** | **5250 kg** | **300 L** |

*The bale length can expand by 10-20 % after ejection from the baler.

**Cardboard, for bale weights for other types of material, contact us.

Operating power: 3x400 V, 50 Hz

We reserve the right to make changes to specifications without prior notice.

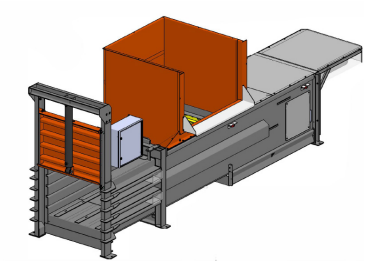

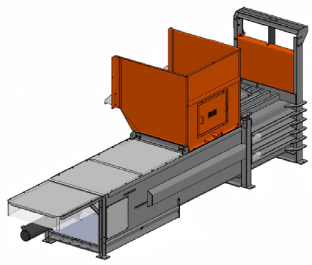

# BEST FEATURES

For an enhanced user experience, the semi-automatic range comes with smart and convenient standard features.

**PORTCULLIS DOOR**
Sturdy vertical door that opens automatically.

**AUTO START**
Equipped with photocell start and a selector for easy switch between manual and automatic operation.

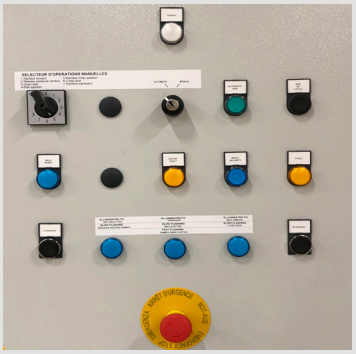

**OPERATING PANEL**
Modern user-friendly operating panel with status indicators and commands for bale ejection and manual operation.

# OPTIONS & ACCESSORIES

A wide range of accessories and options make great machines even better and tailor the semi-automatics to your needs.

**HOPPERS**
Different types and sizes

**BIN LIFTER**
For infeed from four-wheeled bins

**CHUTES/CONVEYORS**
For automated infeed of big waste volumes

**STRAP HOLDERS**

**OIL COOLER/HEATERS**

**OPTICAL WARNING AUTO START**

**ORWAK AB**
Svetsaregatan 4, S-576 33 Sävsjö, SWEDEN
Tel: +46-(0)382-15700
info@orwak.com

**ORWAK.COM**

ORWAK
PART OF Sulo GROUP